STANDARD CONVENTIONAL BASE WITH OPTICAL REMOTE
BASE CONVENZIONALE CON RIPETITORE OTTICO
mod. BS500R + FDFI500

STANDARD CONVENTIONAL BASE
RILEVATORE CONVENZIONALE

mod. BS500R

STANDARD CONVENTIONAL BASE
RILEVATORE CONVENZIONALE

mod. BS500R

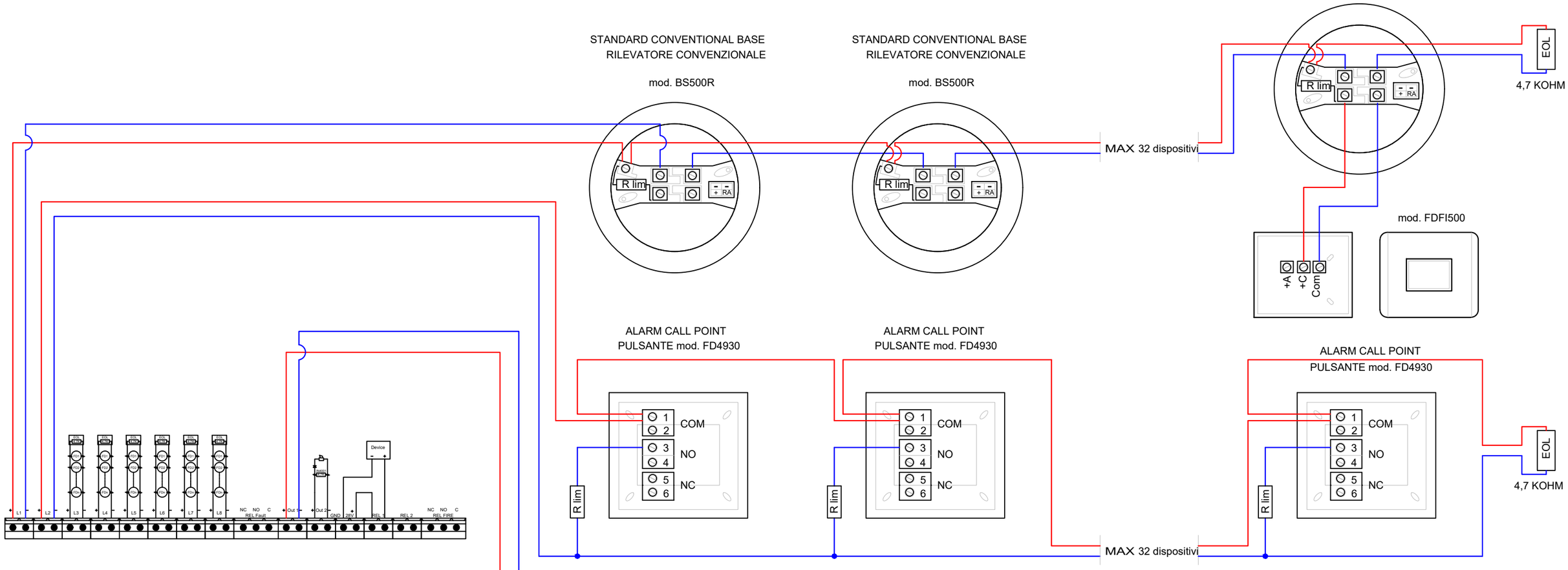

CENTRALI ANTINCENDIO CONVENZIONALI mod. FD9004/08

CONVENTIONAL FIRE ALARM CONTROL PANELS

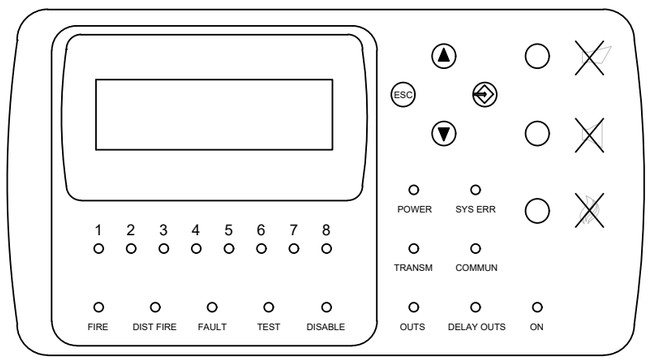

OPTICAL ACUSTIC DISPLAY - TARGA OTTICO ACUSTICA - mod. FD5955

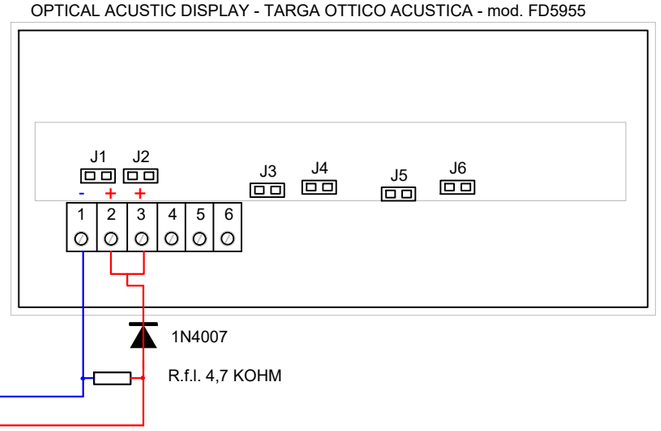

front view - vista frontale - mod. FD5955

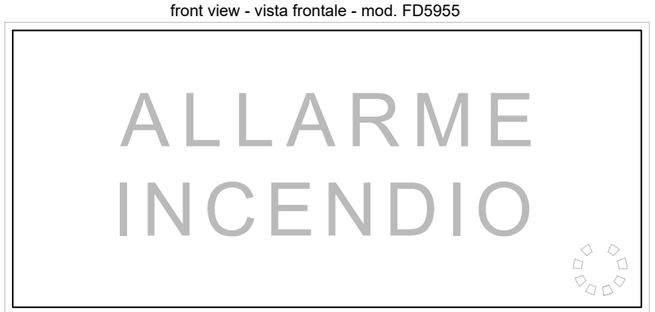

REOL = 4,7 KOHM
RLIM = 1 KOHM

MOD. FD9004/08

N°024_at

FAMILY: FIRE SYSTEM

TYPE: CONVENTIONAL FIRE ALARMS

TELEDATA®
20132 MILANO - Via Giulietti, 8
Tel. +39 02-2592795 +39 02-27201352 Fax +39 02-2593704